DS-2XM6122G1-I(D)(M)(/ND)
Mobile Dome Camera



- High quality imaging with 2MP resolution
- 2.8/4/6mm fixed lens
- Clear imaging against strong back light based on 120 dB WDR technology
- Water and dust resistant (IP66) and vandal resistant(IK10)

▪ Specification

Camera	
Protection Level	IP66, IK10
Min. Illumination	0.002Lux @ (F1.6, AGC ON), 0lux with IR
Shutter Speed	1/3 s to 1/100,000 s
Resolution	2MP
P/N	PAL: 25fps NTSC: 30fps
Day & Night	IR Cut Filter
Sensor Type	1/2.8" CMOS Progressive Scan
Angle Adjustment	Pan: -30°~+30°, tilt: 0°~80°, rotate: 0°~ 360°
White Balance	Support 4 white balance configurations: fluorescent lamp, incandescent lamp, warm lamp and natural light; Support manual/automatic white balance adjustment.
Lens	
Focal Length	2.8mm/4mm/6mm
Focal Length & FOV	2.8mm, horizontal FOV 105°, vertical FOV 56°, diagonal FOV 126° 4mm, horizontal FOV 87°, vertical FOV 44°, diagonal FOV 104° 6mm, horizontal FOV 53°, vertical FOV 28°, diagonal FOV 62°
Lens Mount	M12
Focus	Manual focus
Max. Aperture	2.8/4/6mm: F1.6
Illuminator	
Supplement Light Type	Infrared fill light lamp
Smart Supplement Light	Support
IR Wavelength	850 nm
IR Range	Up to 30 m
Video	
Max. Resolution	1920 x 1080
Main Stream	50Hz: 25fps (1920 x 1080, 1280 x 960, 1280 x 720) 60Hz: 30fps (1920 x 1080, 1280 x 960, 1280 x 720)
Sub-Stream	50Hz: 25fps (704 x 576, 640 x 480, 352 x 288, 320 x 240) 60Hz: 30fps (704 x 576, 640 x 480, 352 x 288, 320 x 240)
Third Stream	50Hz: 25fps (1920 x 1080, 1280 x 960, 1280 x 720) 60Hz: 30fps (1920 x 1080, 1280 x 960, 1280 x 720)
Video Compression	Main stream: H.264, H.265, H.264+, H.265+ Sub-stream: H.264, H.265, MJPEG, H.264+, H.265+ Third stream: H.264, H.265 ,H.264+, H.265+
Video Bit Rate	Main Stream: 256 Kbps to 12288Kbps Sub-Stream: 256 Kbps to 4096Kbps Third Stream: 256 Kbps to 12288Kbps
H.264 Type	BaseLine Profile/Main Profile/High Profile
H.265 Type	Main Profile
Bit Rate Control	Constant Bit Rate, Variable Bit Rate
Stream Type	Main stream, sub stream, third stream

Scalable Video Coding (SVC)	H.264 and H.265 encoding
Region Of Interest (ROI)	Support 2 fixed region for (main/sub) stream
Audio	
Audio Compression	G711U, G711A, G726, AAC, G722, PCM, AAC
Audio Bit Rate	Raw data PCM:256kbps G711U, G711A, G726_A, AAC,G722.1:≤64kbps
Audio Sampling Rate	16 kHz
Environment Noise Filtering	Yes
Network	
Protocols	TCP/IP,HTTP,HTTPS,DHCP,DNS,DDNS ,RTSP,SNMP,QOS,FTP,RTCP,NTP,UPNP,SMTP,IGMP,ICMP,IPV6,UDP,SSL/TLS
Simultaneous Live View	Up to 8 channels
API	ONVIF (PROFILE S, PROFILE G, PROFILE T), ISAPI, SDK
User Management	Up to 16 users,3 levels: Administrator, Operator and User
Web Browser	IE8+, Chrome45+, Edge41+, Firefox45+
Image	
Wide Dynamic Range (WDR)	120 dB
Image Settings	Support rotation mode. Brightness, contrast, saturation and sharpness can be adjusted by browser and client software.
Day/Night Switch	Day/Night/Auto/Schedule
SNR	> 50 dB
Image Enhancement	BLC, HLC, 2DNR ,3DNR
Privacy Mask	Enables configuration, and supports drawing of up to 4 areas
Picture Overlay	Support image overlay, uploading images, enabling, coordinates, etc.
Target Cropping	Support (only the third stream)
Backlight Compensation(BLC)	Support up, down, left, right, center and custom backlight compensation adjustment
Interface	
Video Output	Not supported
Ethernet Interface	-ID: 1 RJ45 10M/100M self-adaptive Ethernet port -IM/ND, IDM: 1 four-core M12 aviation plug
Audio	1 built-in mic, mono sound
Reset Key	Support
Interface Type	Interpolate
TF Card Storage	Built-in Micro TF Slot, up to 256 GB(not for baseline. Note the Micro-TF card capacity when ordering)
Event	
Linkage Method	Upload to FTP, notify monitoring center center, send email, trigger recording
Basic Event	Motion detection, video tampering alarm

Smart Event	Line crossing detection, Intrusion detection, Region entrance detection, Region exiting detection, Unattended baggage detection, Object removal detection, Object detection: detects faces and upload images Scene change detection, defocus detection, Loitering Detection, People Gathering Detection, Fast Moving Detection, Parking Detection,
General	
Product Dimension	Camera: Φ 99.3 mm × 96.7mm x 52.9 mm (3.9" × 3.8" x 2.1")
Power	PoE:0.30 A to 0.20 A, max: 7.5W DC: 0.83 A to 0.21 A, max: 7.5W
Camera Material	Metal
Package Dimension	252 mm × 160 mm × 95 mm (9.9" × 6.3" × 3.7")
Product Weight	Approx. 390 g (0.86 lb.)
Startup and Operating Conditions	-30 °C to 75 °C (-22 °F to 167°F), humidity less than 95% or less (non-condensing)
Language	English, French, German, Russian, Italian, Korean, Portuguese, Spanish, Turkish, Polish, Czech
General Function	Anti-flicker, heartbeat, mirror
Software Reset	Support
Power Supply	-ID: 9-36V& PoE (802.3af, 36 V to 57 V) -IDM: 9-36V& PoE (802.3af, 36 V to 57 V) -IM/ND: PoE (802.3af, 36 V to 57 V)
Power Interface	-ID: Ø 5.5 mm coaxial power plug, DC power supply, or PoE power supply -IM/ND: four-core M12 aviation plug, PoE power supply
Cable Length	50 cm
Selection Parameter	
Wi-Fi Support	Not supported
POE Support	PoE (802.3af)
Approval	
Class	Class B
EMC	FCC: FCC-SDoC(ANSI C63.4,FCC Part15 sub B) CE: CE-EMC(EN 55024:2010 +A1:2015,EN 55032:2015,EN 61000-3-2:2014,EN 61000-3-3:2013) RCM: AS/NZS 60950.1:2003 + Am1, Am2 and Am3,AS/NZS CISPR 32:2015IC: ICES-003 Issue 7:2020 KC: KN32:2015,KN35:2015

Safety	UL: UL 60950-1:2014,CAN/CSA C22.2 No. 60950-1-07:2014CB: IEC 60950-1CE: CE-LVD(EN 60950-1:2006+A11:2009+A1:2010+A12:2011+A2:2013) LOA: SANS IEC60950-1 BIS: IS 13252(Part 1)2010+A1:2013+A2:2015
Environment	CE: CE-RoHS(RoHS Directive 2011/65/EU+2015/863) WEEE: 2012/19/EUReach SVHC: Regulation (EC) No 1907/2006
Electrical Safety Protection	IK10: IEC 62262:2002
Automotive and Railway	EN50155: EN 50155-2007,EN 50155-2017 EN45545: (EN 45545-2:2013+A1:2015); E-MARK (ECE R10)

▪ Wiring

Cable Interfaces

Model	Interface Type	Interface Form	Interface Definition	Interface Illustration
XM61	ID	RJ45/F	1.IPC_TX+ 2.IPC_TX- 3.IPC_RX+ 4.IDLE4 5.IDLE5 6.IPC_RX- 7.IDLE7 8.IDLE8	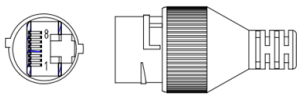
		DC/F	Core: IPC_POWER Shell: IPC_GND	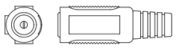
	IDM	M12D4F	1.IPC_TX+ 2.IPC_RX+ 3.IPC_TX- 4.IPC_RX-	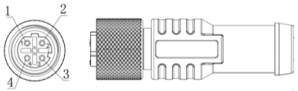
		MOLEX-2M	1.IPC_POWER 2.IPC_GND	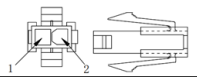
	IM/ND	M12D4F	1.IPC_TX+ 2.IPC_RX+ 3.IPC_TX- 4.IPC_RX-	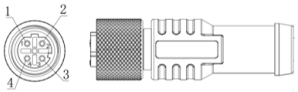

▪ Available Model

DS-2XM6122G1-ID(2.8mm)(AE)

DS-2XM6122G1-ID(4mm)(AE)

DS-2XM6122G1-ID(6mm)(AE)

DS-2XM6122G1-IDM(2.8mm)(AE)

DS-2XM6122G1-IDM(4mm)(AE)

DS-2XM6122G1-IDM(6mm)(AE)

DS-2XM6122G1-IM/ND(2.8mm)(AE)

DS-2XM6122G1-IM/ND(4mm)(AE)

DS-2XM6122G1-IM/ND(6mm)(AE)

▪ Dimension

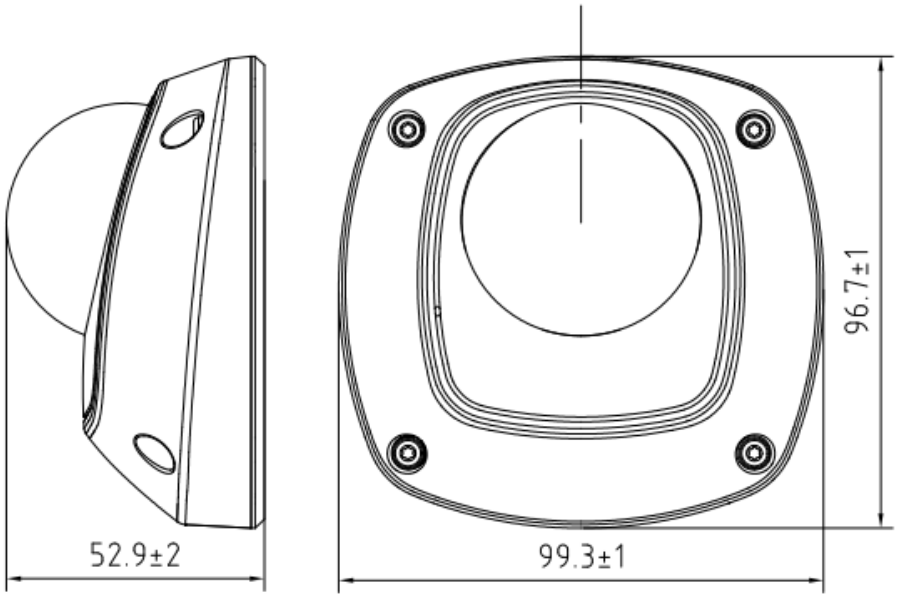
52.9±2
99.3±1
96.7±1

See Far, Go Further

www.hikvision.com
support@hikvision.com

© Hangzhou Hikvision Digital Technology Co., Ltd. Unless otherwise agreed, Hikvision makes no warranties, express or implied. We reserve the right to introduce modifications without notice.

HIKVISION®