# RACKG-IK Series

## Industrial displays for server racks

Resistant to shocks and vibrations

ALLWAN
VIDEO & SECURITY SOLUTIONS

## DESCRIPTION

- Sizes from 15 to 24'
- Shocks and vibrations resistant
- Protective glass slab
- Wide range of video inputs available
- Optional 9-36VDC power supply
- Optional touch panel





21 and 24''

The RACKG-IK industrial rack-mount monitors are available in 6 sizes from 15 to 24".
Their ruggedized design makes them a reliable solution for any installation in industrial environments, mobile server racks, or in-vehicle applications.

Equipped with a shockproof protective slab, they can also be optionally fitted with tempered glass for the most demanding environments.

## Technical Speci fications

| Part Number | RACKG-IK15 | RACKG-IK17 | RACKG-IK173 | RACKG-IK19 | RACKG-IK21 | RACKG-IK24 |
|---|---|---|---|---|---|---|
| **Display Size** | 15'' | 17'' | 17.3'' Wide | 19'' | 21,5'' | 23,8'' |
| **Backlight** | LED | | | | | |
| **Resolution** | 1024*768 | 1280*1024 | 1920*1080 | 1280*1024 | 1920*1080 | 1920*1080 |
| **Contrast** | 700 :1 | 1000 :1 | 400 :1 | 1000 :1 | 3000 :1 | 1000 :1 |
| **Brightness** | 450nits | 250nits | 300nits | 350nits | 250nits | 250nits |
| **Viewing angles** | 160/140 | 170/178 | 140/120 | 170/160 | 178/178 | 178/178 |
| **Pitch** | 0.297 | 0.264 | 0.1989 | 0.294 | 0.24825 | 0.2745 |
| **Colors** | 16.7M | 16.7M | 262K | 16.7M | 16.7M | 16.7M |
| **MTBF (hours)** | 50000 | 50000 | 10000 | 50000 | 50000 | 50000 |
| **DVI-D** | Standard : VGA and DVI-D<br>Options : HDMI, BNC CVBS, 3G-SDI, HD-SDI, SD-SDI | | | | | |
| **Audio Input** | 3.5mm stereo jack | | | | | |
| **Touch panel** | Optional: Resistive or capacitive on USB port | | | | | |
| **Power** | Standard : 100-240VAC<br>Option : 9-36VDC | | | | | |
| **Height** | 7U | 8U | 6U | 8U | 8U | 8U |
| **Mounting** | In 19'' rack | | | | | |
| **Construction** | Metal | | | | | |
| **Working temperature** | 0 to +50°C | | | | | |
| **Humidity** | 5-95% non-condensed | | | | | |
| **Vibrations** | 5 - 500 Hz / 1 Grms PTP | | | | | |
| **Shocks** | 15G/ Tip (11 ms) | | | | | |
| **Dimensions** | 480x311x60mm | 482x355x62mm | 482x266x63mm | 483x355x60mm | 501x350x60mm | 600x355x60mm |
| **Weight** | 7.5Kg | 9.5Kg | 7Kg | 8Kg | 9.5Kg | 11Kg |
| **Certifications** | CE / FCC / RoHs | | | | | |

14 Rue Olivier De Serres – 49070 Beaucouzé – France
+33 2 41 350 125
info@allwan.fr
www.allwan.eu

# RACKG-IK Series

## Industrial screens for server racks

Resistant to shocks and vibrations

ALLWAN
VIDEO & SECURITY SOLUTIONS

## DIMENSIONS – RACKG-IK15

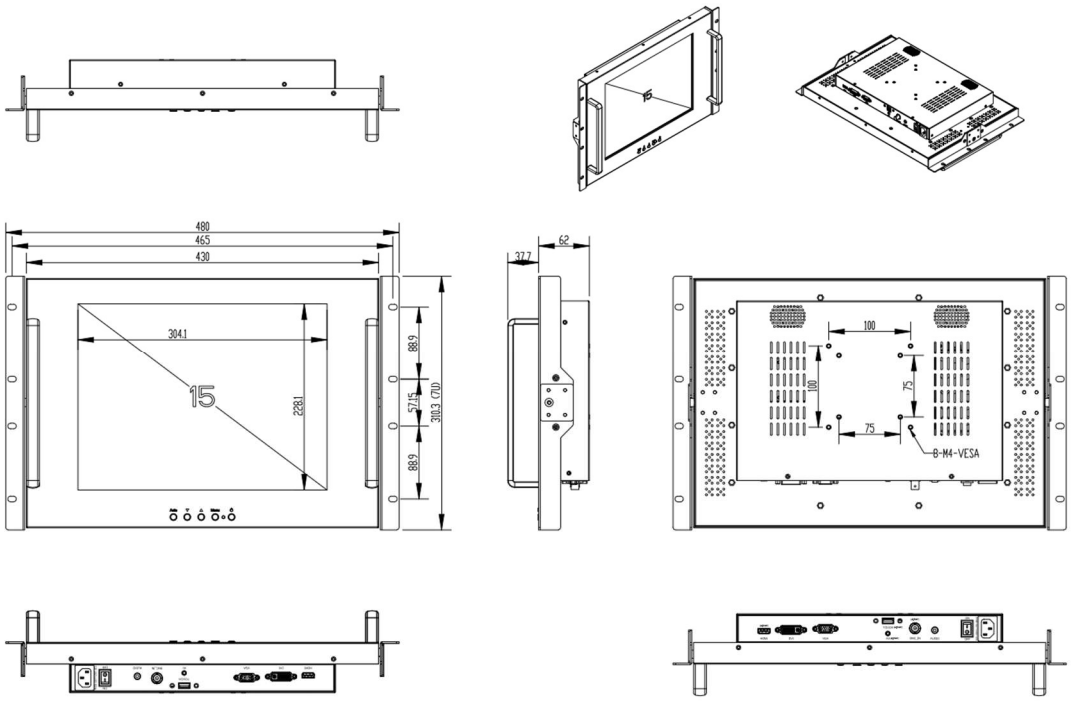


## DIMENSIONS – RACKG-IK17

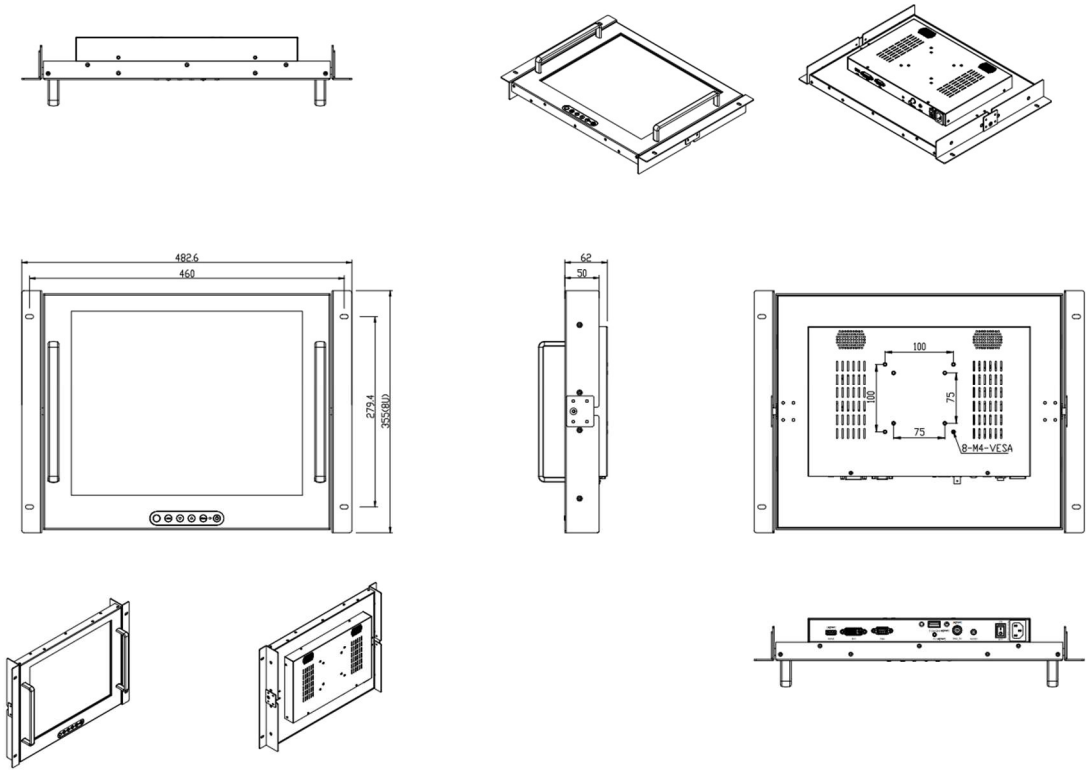


14 Rue Olivier De Serres – 49070 Beaucouzé – France
+33 2 41 350 125
info@allwan.fr
www.allwan.eu

# RACKG-IK Series

## Industrial screens for server racks

Resistant to shocks and vibrations

ALLWAN
VIDEO & SECURITY SOLUTIONS

## DIMENSIONS – RACKG-IK173

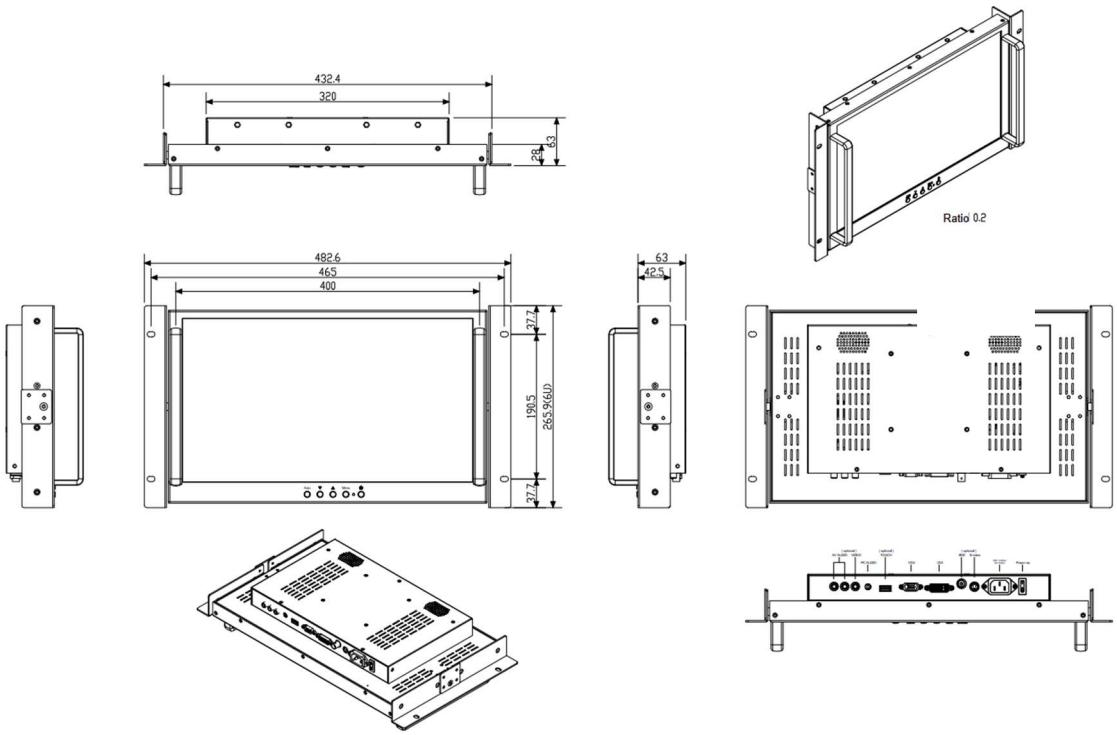


## DIMENSIONS – RACKG-IK19

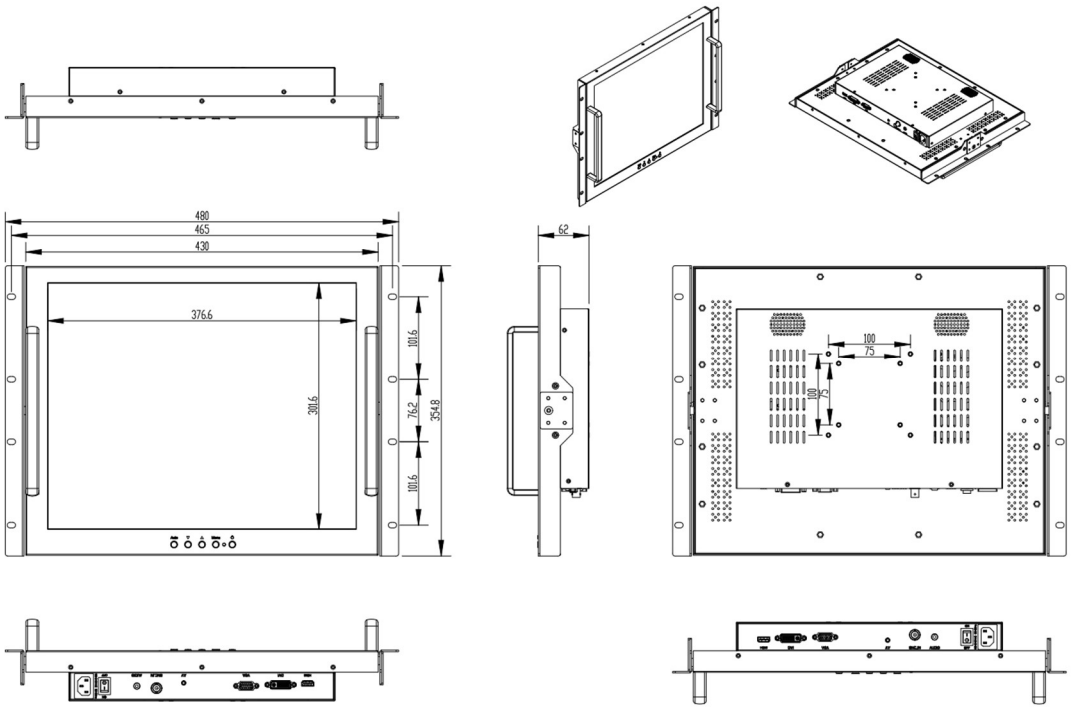


14 Rue Olivier De Serres – 49070 Beaucouzé – France
+33 2 41 350 125
info@allwan.fr
www.allwan.eu

# RACKG-IK Series

## Industrial screens for server racks

Resistant to shocks and vibrations

### DIMENSIONS – RACKG-IK21

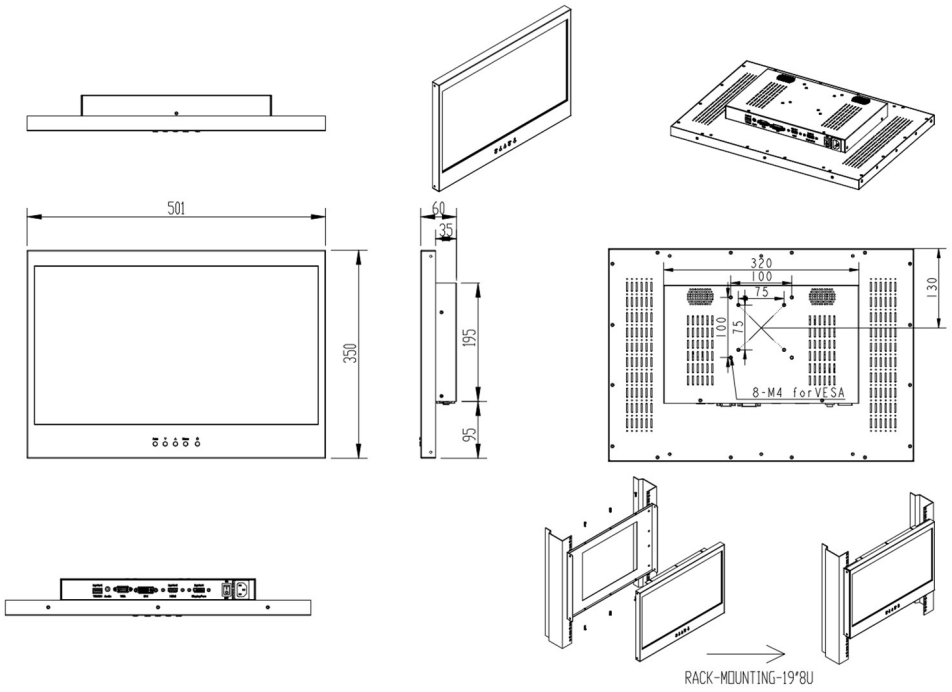


### DIMENSIONS – RACKG-IK24

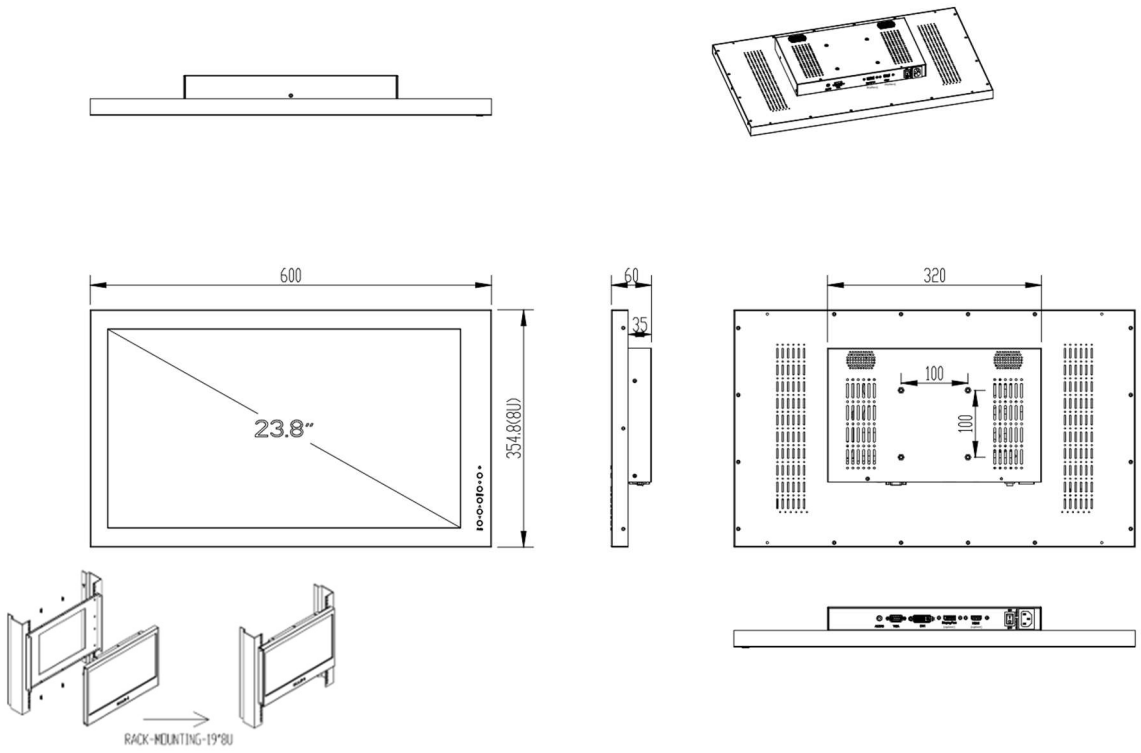


14 Rue Olivier De Serres – 49070 Beaucouzé – France
+33 2 41 350 125
info@allwan.fr
www.allwan.eu