PCW-129Q

12'' embedded Windows IoT Tablet

Intel® Elkhart lake x6413E

ALLWAN
VIDEO & SECURITY SOLUTIONS





DESCRIPTION

- 12'' Display
- Intel® Elkhart lake x6413E processor
- Fully Waterproof IP65
- Works from -30 to +60°C
- Brightness 400 nits – 800 nits optional
- Multi-touch capacitive panel

The PCW series Windows IoT tablets are robust tools designed for industrial and logistics applications. Powered by a Intel® Elkhart lake x6413E processor, the PCW-129Q delivers reliable performance for forklift and fleet operations.
Completely waterproof, it works from -30°C to up to 60°C.

Technical Speci fications

	PCW-129Q
DISPLAY	
Assembly method	Optical bonding to prevent fogging in cold environments
Resolution	1024 x 768
Size	12''
Touch	Multi-touch capacitive – Supports the use of a stylus (supplied)
Processing	Anti-glare
Brightness	400 nits – 800 nits optional
Contrast	1000 :1
Viewing angles	89, 89, 89, 89°
SYSTEM	
Processor	Intel Atom x6413E 1.5GHz (Up to 3GHz) (Defaut) Options : Intel Atom x6425E / x7433RE / x7835RE
Storage	128GB
WLAN (WIFI)	YES
WWAN	4G (Option) 5G (option)
Sensors	G-Sensor
Memory	8GB
OS	Android 15.0
BT	Supported
GNSS	GPS/GLONASS
PORTS (Station)	
USB	1 x USB 3.0 (tablet) 1 x DB9 connector for 2 USB 2.0 ports from its station
Memory card	1 slot for SD card
Audio / CAN	Speakers/ 1 CAN Bus port
Serie	2 COM ports
SIM card	1 port (Option – Tablet)
LAN	1 RJ45 Gigabit port
Antennas	WLAN (tablet)/ GPS/ WWAN/5G (option)

14 Rue Olivier De Serres – 49070 Beaucouzé – France
+33 2 41 350 125
info@allwan.fr
www.allwan.eu

PCW-129Q

12'' embedded Windows IoT Tablet

Intel® Elkhart lake x6413E

ALLWAN
VIDEO & SECURITY SOLUTIONS

ELECTRICAL/ MECHANICAL	
Dimensions/ Weight	Tablet : 307 x 225 x 41 mm / 1,7Kg Station : 202 x 245 x 52mm / 1,6Kg
Ingress Protection	**IP65 on all 6 sides**
Mounting	RAM Mount and VESA
Power	Station: 10-60VDC Tablet: 12VDC + 7.6V backup battery UPS 2S1P – Minimum 30 minutes
Certifications	CE, FCC
Compliance	EN62262 IK07, EN6100-4-2 ESD +/-8KV Direct and +/-12KV Air Chocs: MIL-STD-810H Method 516.8 Procedure I / Vibrations: MIL-STD-810H Method 514.8 Procedure I
ENVIRONMENT	
Working Temperature	-30 at +60°C
Humidity	5% to 95% – Not condensed

ACCESSORIES

PROVIDED	OPTIONAL
5m power cable with integrated fuse	RS232 1.8m cable
USB 0.3m	Audio 0.3m cable
0.15m power conversion cable	Bus CAN 1.8m cable
Jack DC power cable	2m waterproof IP65 RJ45 cable
Wifi antennas x 2	Dual GPS and LTE antenna 2m
Attachment for external antenna	Dual GPS and LTE antenna 5m
Station	Dual GPS and LTE magnetic antenna
Stylus set	USB-C to HDMI adapter

DIMENSIONS

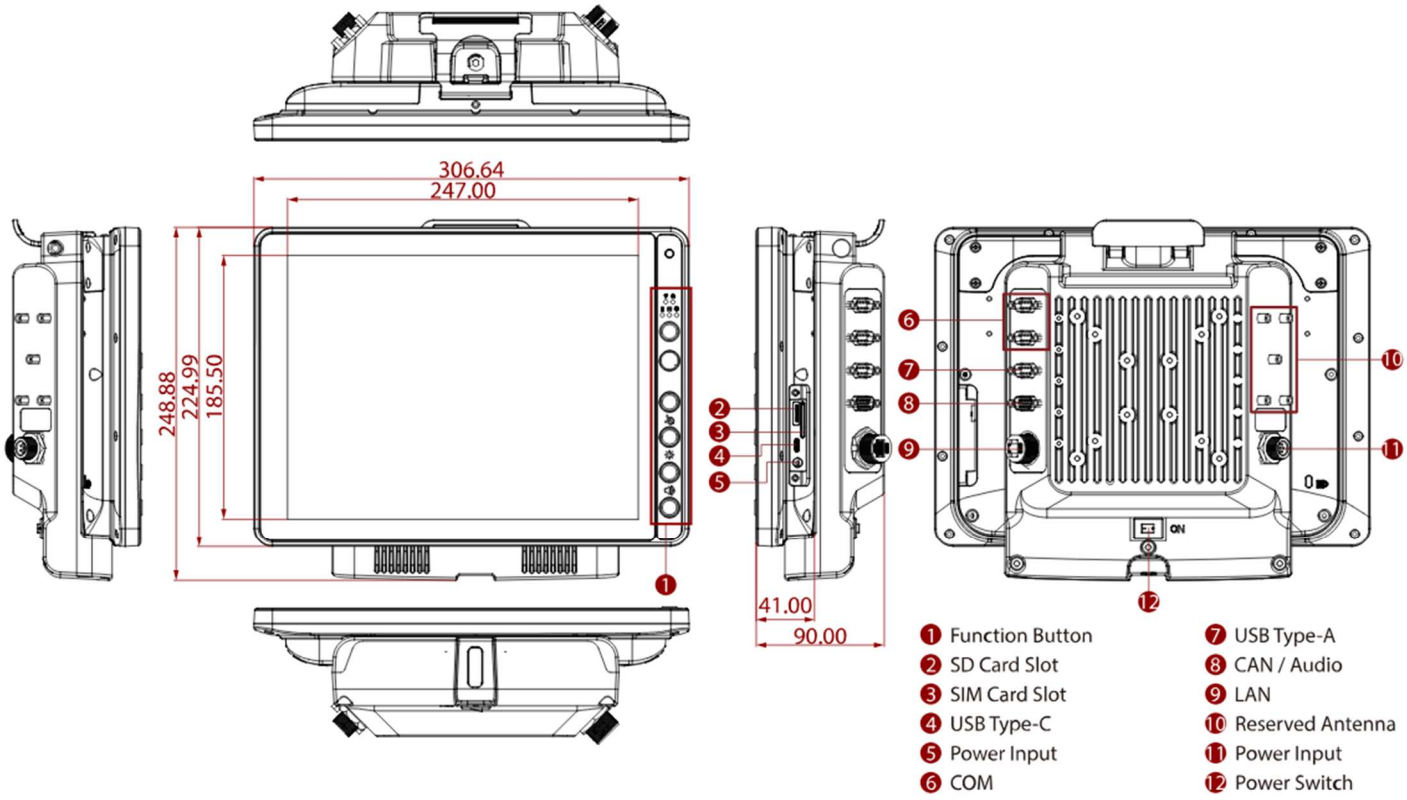

14 Rue Olivier De Serres – 49070 Beaucouzé – France +33 2 41 350 125 info@allwan.fr www.allwan.eu