Vision is our mission®

Monitor 7” RLED RC 4 CS
Article no. 0208902
2018 • DS0962117 EN A 02

Product Data



Dimensions

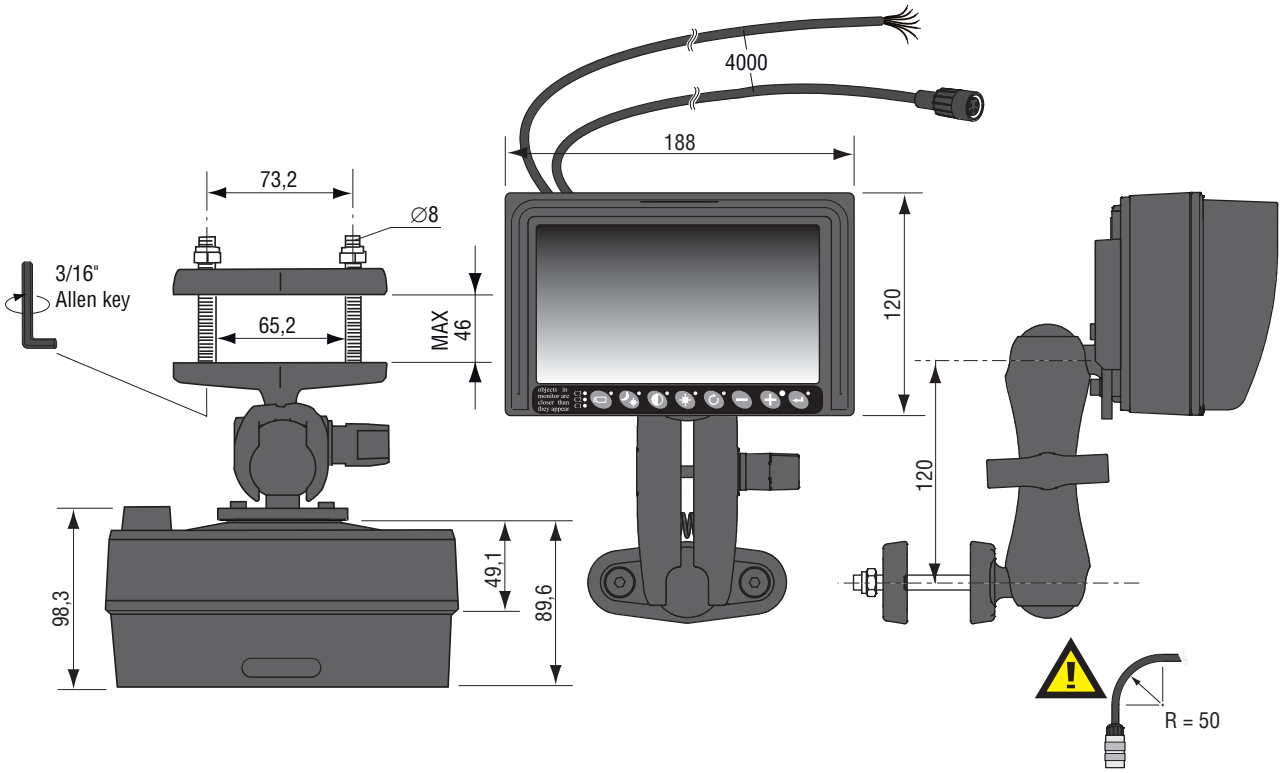

units in mm

Min. bend radius= 50mm

TECHNICAL DATA

Monitor 7” RLED RC 4 CS

	Description
Article number	**0208902**
Cables / Connectors	4m multicable (power) open wired, 4m multicable (video) with 4p molded female connector. Art. No.: 8976223
Bracket	User-adjustable mounting bracket with clamp; Art. No.: 2015800, 2015750 and 2015950 is supplied.
Weight	2,1kg (Monitor, bracket, cables and connectors)
Use	Suitable for open-cabin, drive-in/drive-out cold store use.
Type	Automotive 7inch TFT liquid crystal display module LED backlight.
Resolution	WVGA 800xRGBx480 pixels.
Viewing	70° horizontal and 60° vertical (@ CR≥10).
LED Life Time	30000 Hrs.
Typical performance	Center luminance of white: 600cd/m2, Contrast ratio 650:1, Response time 5 ms (Tr).
Softwaremenu	Full On-Screen-Display (OSD) functionality in 15 languages: English, Dutch, German, French, Chech, Hungarian, Italian, Polish, Portuguese, Spanish, Turkish, Swedish, Finnish, Danish, Norwegian.
ABC mode	Improved Auto Brightness Control (ABC) including one-touch day/night setting and adjustable minimum and maximum levels for automatic control.
Operating temperature	-40°C ..+85°C.
Storage temperature	-40°C ..+125°C.
	Electrical
Input voltage range	12...60V +/-10%.
Power consumption	Max 12W (only for the monitor, total power consumption depending on cameras and other peripherals).
Protection	>70V overvoltageprotection, <10V undervoltageprotection, protected against loaddumps, spikes and surges, reverse polarity on all wiring.
Power-output	Nominal 2A +/-10% for powering cameras and other peripherals.
Video input	1Vtt, 75Ω, Pal 50 Hz, 4,43MHz color sub carr. NTSC 60 Hz, 3,58MHz color sub carr.
	Mechanical
Surface	Hard coating (3H), with AG LR (Low Reflection) polarizer.
Housing	Color Black, material: aluminium & high impact automotive synthetic thermoplastic polymer.
Shock constancy	Shock and vibration resistant for usage on trucks, cranes, fork-lifts, maritime applications, machinery. Random vibration test 15,3G_{rms} at frequency: 24 to 2000, PSD (g^2/Hz) 0,04 to 0,10.
Ingress protection	IP67 according IEC 60529 (dust tight, immersion in water up to 1m for 30 min).
Truck use	Withstand all fluids and materials used in and around trucks like: ammonia solution 5%, ethanol 80-100%, isopropanol 5-10%, soapy water (min. 50% soap per volume), alkaline degreasing compounds(used in high pressure washing equipment).
	Certification
Quality & environment	Units are manufactured by Orlaco in the Netherlands; ISO 9001, ISO14001, ISO-TS16949.
Approvals	Approvals in compliance with all relevant EMC- and Automotive directives. Certificates available upon request. This device complies with Part 15 of the FCC Rules. Operation is subject to the following conditions: (1) this device may not cause harmful interference, and (2) this device must accept any interference received, including interference that may cause undesired operation.
Green Passport	All materials are compliant to Green Passport requirements according IMO resolution MEPC.197(62) as adopted on 15 July 2011 (Maritime sector: International Maritime Organization concerning the functions of the Marine Environment Protection Committee).

Each product is delivered with a User manual and Installation manual.

All data subject to change without notice. All dimensions are for commercial purpose only.
The camera/display systems from Orlaco comply with the latest CE, ADR, EMC and mirror-directive regulations, where applicable.
All products are manufactured in accordance with the ISO 9001 quality management system, ISO/TS 16949 quality automotive, ISO 14001 environmental management systems and all Ex products with the IECEx scheme and ATEX directives, where applicable.